DO-5102
Dissolved oxygen analyzer two channel

Dual-channel Analyzer of dissolved oxygen is designed for measuring dissolved oxygen concentration and temperature of the analyzed liquid, with digital and graphical indication of measured parameters, with alarms when the measured parameter outside specified values, and to converting the measured value into a unified output DC signal and communication with the computer via digital interface RS-485, and archiving measured values.

The dual-channel analyzer is a measurement tool consisting of one or two amperometric membrane sensors dissolved oxygen and panel-mounting measurement instrument.

The analyzer can be equipped with a lot type of holders . The sensor can be equipped with the cleaning cup to auto-clean it by air flow.

Application field analyzer - automated systems of management, control and regulation of technological processes in thermal power generation, municipal and industrial water purification systems, for quality control of drinking water at the enterprises of aquaculture and other industries.

Using the indicator and 4-buttons control panel, the user can view and modify configuration settings of the analyzer:

- assignment of units, number of channels, viewing in GUI mode (trends);
- enable and configure the program's settings, filter;
- view and change setpoints, hysteresis, delay and logic relays alarm;
- the range of output current.

BASIC TECHNICAL SPECIFICATION AND PARAMETERS

Dissolved oxygen concentration measuring ranges:

- with low concentration sensor 5500D.1 ..... (0,0...1999) µg/dm3, (0,0...2000...20000) µg/dm3
- with standard sensor 5500D.2, 5500D.3 ..... (0...2,000...19,99) mg/dm3
- with standard sensor ..... (0...200) %

Basic percentage error value limit ..... ± (2,5+0,035 C), mg/dm3 where C is the measured value, mg/dm3
Analyzed liquid consumption measuring range (with hydropanel) ..... (0,9...48)l/h
Analyzed liquid temperature range ..... (0..+45);(-5..+85..+140(shortly))°C/depend from sensor type
Basic percentage error value limit in temerature ..... ±0,3°C
Reaction time 90% ..... <2min
Type of automatic temperature compensation ..... - gas permeability of the membrane sensor
- the solubility of oxygen in water
Compensating for changes in atmospheric pressure ..... automatic or manual
Salinity compensation ..... with manual entry
Calibration ..... by atmospheric air
Type of temperature sensor Pt1000
Maximum pressure ..... 1 bar at 25°C
Type of MI ..... panel-mounitng
Type of MI indicator ..... graphic LCD
Instrument to sensor cable length ..... max 10 m
Output signals:

- -two analog, programmable ..... (0…5), (0…20) mA or (4…20) mA
- -interface ..... RS-485 ModBus RTU communication protocol
- -four discrete ..... switching over dry contact, 240 V, 3A

Archiving interval ..... 1 sec
Archiving time ..... max 1 year
Power supply voltage ..... ~(100..240)V, (50..60)Hz

Power consumption	max 15VA
MI enclosure material	ABS plastic
Sensor enclosure material	PVC
MI dust and water protection	IP65 (front panel)
Sensor dust and water protection	IP68
MI climatic version	T=(+5..+50) °C
Sensor climatic version:	T=(+5..+50); (-5..+85..+140(shortly)) °C/depend from sensor type
MI enclosure material	ABS plastic
Resistance to mechanical influences	V2
MI weight	max 1,6 kg
Sensor weight	max 0,6 kg

EXTERNAL WIRING

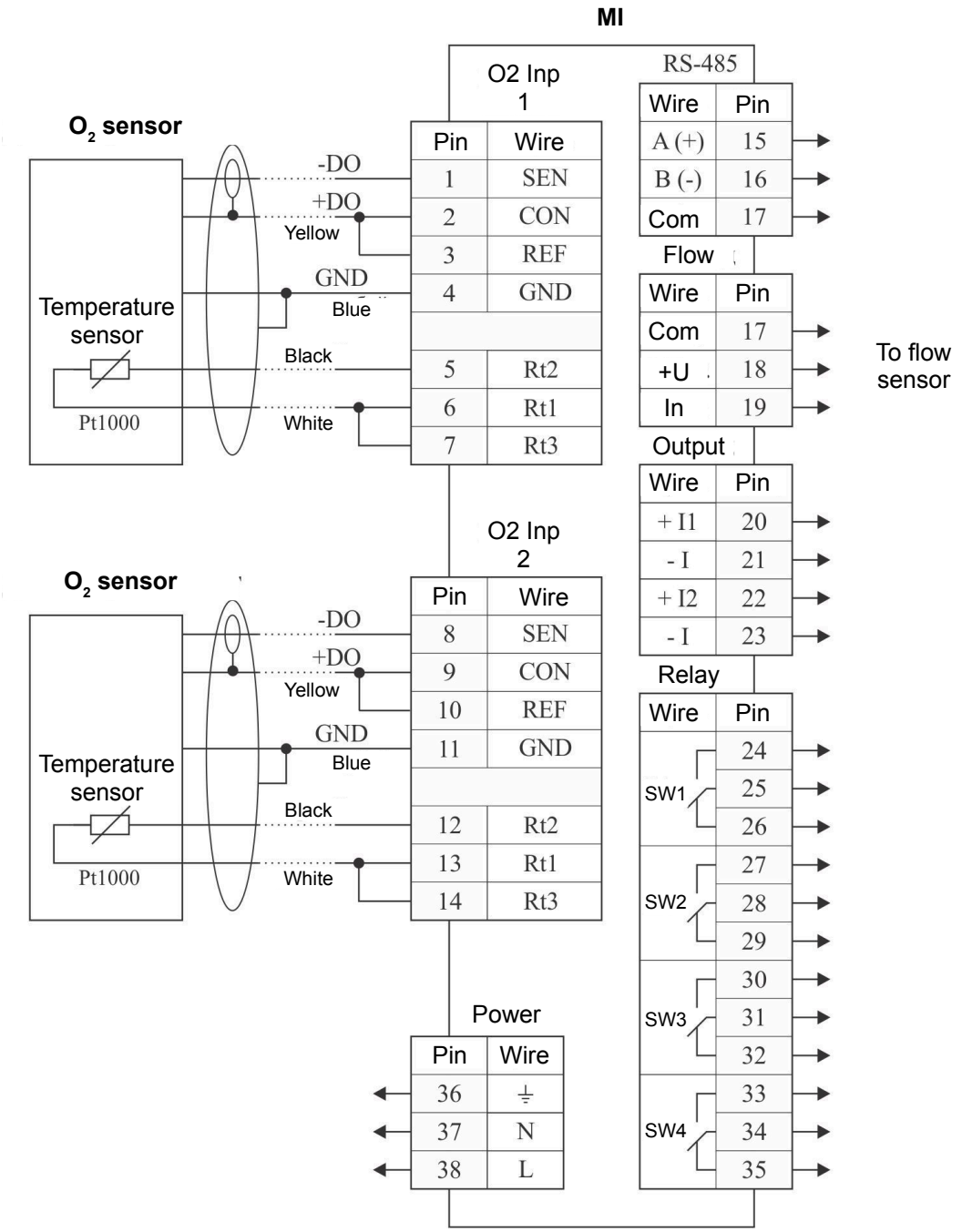

Figure 1 Connection of the sensor to the measuring instrument

OVERALL AND MOUNTING DIMENSIONS

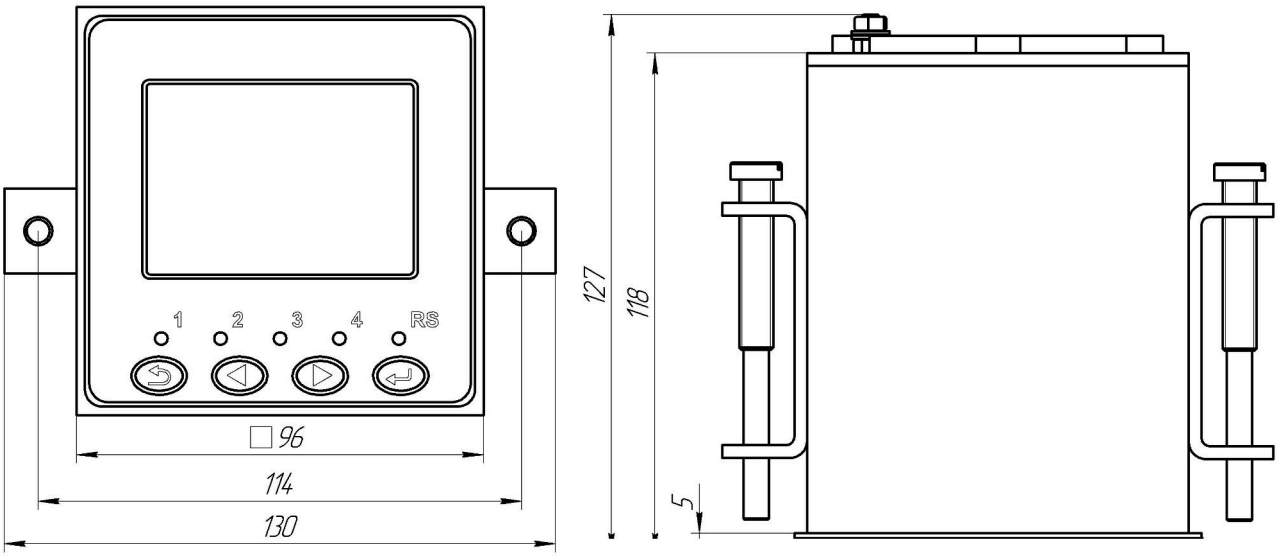

Figure 2 Dimensions of the panel-mounting DO-5102

ACCESSORIES

For small concentration:
- small concentration sensor (SCS), resolution 0,1 µg/dm3;
- hydropanel HP-5101.

For standard concentration:
- standard sensor (SS), resolution 10 µg/dm3;
- holder for sensor mounting (look part "**Holders for sensors**").

Spare membrane cartridge for membrane sensors.
Cabinet for installing the analyzer, including outdoor with heating

Holders, used with DO-5102 (look part «Holders for sensors»)

Sensors look in DO-5101 part.

ORDER REFERENCE CODE:

DO-5102.	**x.**	**x-**	**xxxx**
			xxxx Upper limit of measuring range
		Type of MI housing	
		P	Panel-mounting
	Number of sensors:		
	1	one	
	2	two	

Example: **DO-5102.2.P-20mg/dm3** «Dissolved oxygen analyser DO-5102 with two sensors, panel-mounting MI; measure range (0...20) mg/dm^3 ».